Computer Exercise

The goal of this exercise: Solving the scattering matrix of an in-plane symmetric step of two waveguides filled with different dielectric materials of relative dielectric constants $\varepsilon_{r_1} = 2, \varepsilon_{r_2} = 1$, as depicted in the figure below:

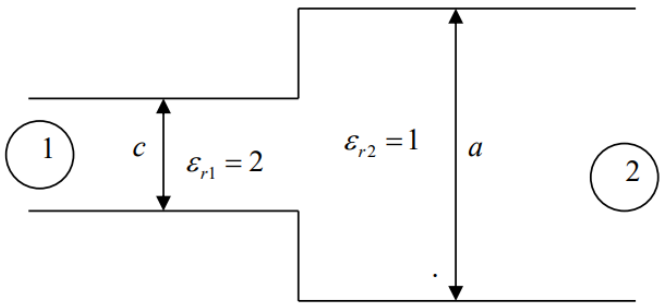

ID	c [mm]	a [mm]	f1-f2 – [GHz]
[ID REMOVED]	7.9	10.6	17.31 - 25

Analytical derivation using the mode matching method:

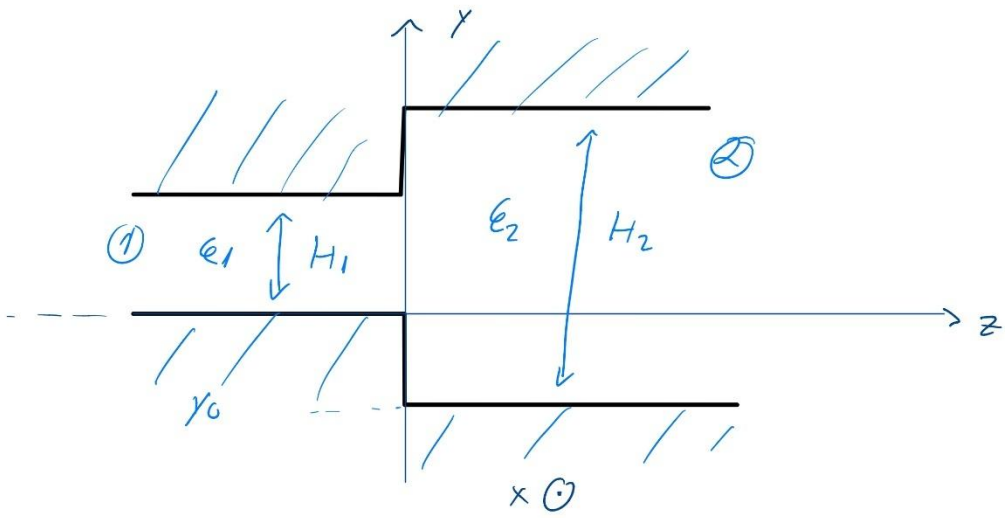

TE:

$$E_x^i(y,z) = \sum_{n=1}^{\infty} A_n \sin(\gamma_n y)\, e^{-j\beta_n z}$$

$$\gamma_n = \frac{n\pi}{H_1}, \quad k_0 = \frac{\omega}{c}, \quad \beta_n = \sqrt{k_0^2 - \gamma_n^2}$$

$$E_x^r(y,z) = \sum_{n=1}^{\infty} B_n \sin(\gamma_n y) \cdot e^{+j\beta_n z}$$

$$E_x^t(y,z) = \sum_{n=1}^{\infty} C_n \sin\left(\gamma_n' (y - y_0)\right) \cdot e^{-j\beta_n' z}$$

$$\gamma_n' = \frac{n\pi}{H_2}$$

Mode Matching:

$$(1)\quad \begin{cases} E_x(y, z=0^+) = E_x(y, z=0^-) & (0 \le y \le H_1) \\ 0 & \text{else} \end{cases}$$

$$\nabla \times \vec{E} = -j\omega\mu \vec{H}$$

$$\nabla \times \vec{E} = \left(0, \frac{\partial E_x}{\partial z}, -\frac{\partial E_x}{\partial y}\right)$$

TE: $\uparrow$ $E_z = E_y = 0$

$$= -j\omega\mu \vec{H}$$

$$H_x = 0$$

$$H_y = \frac{1}{j\omega\mu} \cdot \frac{\partial E_x}{\partial z}$$

$$H_z = \frac{-1}{j\omega\mu} \cdot \frac{\partial E_x}{\partial y}$$

$$\rightarrow \quad \frac{1}{j\omega\mu} \cdot \frac{\partial E_x}{\partial z} = H_y$$

$$\Rightarrow (2) \quad \frac{1}{\mu_1} \cdot \frac{\partial E_x^{(1)}}{\partial z} = \frac{1}{\mu_2} \cdot \frac{\partial E_x^{(2)}}{\partial z}$$

(1) $z = 0$

$$\sum_{m=1}^{\infty} C_m \sin\left(\gamma_m' (y - y_0)\right) \overset{N}{=}$$

$$\overset{N}{=} \begin{cases} \sum_{n=1}^{\infty} (A_n + B_n) \cdot \sin(\gamma_n y) & 0 \le y \le H_1 \\ 0 & y_0 \le y \le 0 \quad H_1 \le y \le y_0 + H_2 \end{cases}$$

(2)

$$\frac{1}{\mu_2} \sum_{m=1}^{\infty} \beta_m' C_m \sin\left(\gamma_m' (y - y_0)\right) \overset{N}{=}$$

$$\overset{N}{=} \frac{1}{\mu_1} \sum_{n=1}^{\infty} (A_n - B_n) \beta_n \sin(\gamma_n y) \quad 0 \le y \le H_1$$

אם $N \to \infty$ כמשמעותם

נכפיל את שני הצדדים ב $\sin(\gamma_k'(y-y_0))$

ונעשה אינטגרל על הרוחב:

$$\frac{2}{H_2}\int_{y_0}^{y_0+H_2} \sum_{m=1}^{N} C_m \cdot \sin(\gamma_m'(y-y_0)) \cdot \sin(\gamma_k'(y-y_0))\,dy$$

$$= C_k$$

$$= \frac{2}{H_2}\int_{0}^{H_1} \sum_{n=1}^{N} (A_n+B_n)\cdot \sin(\gamma_n y)\cdot \sin(\gamma_k'(y-y_0))\,dy$$

$\Rightarrow$

$$C_k = \sum_{n=1}^{N} (A_n+B_n)\,\underbrace{\frac{2}{H_2}\int_{0}^{H_1} \sin(\gamma_n y)\cdot \sin(\gamma_k'(y-y_0))\,dy}_{I_{kn}'}$$

נעת סמיר תנאי השפה השני:

נכפיל את שני הצדדים ב $\sin(\alpha_k'(y))$

ונעשה אינטגרל על הרוחב:

$$\frac{2}{H_1}\int_0^{H_1}\sum_{n=1}^{N}(A_n-B_n)\cdot\sin(\alpha_n y)\cdot\sin(\alpha_k'(y-y_0))\,dy\cdot\beta_k =$$

$$= (A_k-B_k)\cdot\beta_k\cdot\frac{1}{\mu_1}$$

$$\frac{2}{H_1}\int_{y_0}^{y_0+H_2}\sum_{m=1}^{N}C_m\cdot\sin(\alpha_m'(y-y_0))\cdot\sin(\alpha_k'(y-y_0))\,dy\cdot\beta_m'$$

$$=\frac{1}{\mu_2}\sum_{m=1}^{N}C_m\cdot\beta_m'\;\underbrace{\frac{2}{H_2}\int_0^{H_1}\sin(\alpha_k y)\sin(\alpha_m'(y-y_0))\,dy}_{I_{km}}$$

$$C_m = \sum_{n=1}^{N} (A_n + B_n)\, I_{mn}'$$

$$\vec{c} = [C_1, C_2 \ldots C_N]^T$$

$$\vec{a} = [A_1, \ldots A_N]^T$$

$$b = [B_1, \ldots, B_N]^T$$

$$\bar{\bar{M}}_2 = I_{mn}'$$

$$\boxed{\vec{c} = \bar{\bar{M}}_2 \cdot (\vec{a} + \vec{b})}$$

$$(A_m - B_m) \cdot \beta_m = \sum_{n=1}^{N} c_m \cdot \beta_n' \, I_{mn}$$

$$\bar{\bar{D}} = \begin{pmatrix} \beta_1 & & & \\ & \beta_2 & & \\ & & \ddots & \\ & & & \beta_n \end{pmatrix}$$

$$\boxed{\bar{\bar{D}} \left(\vec{a} - \vec{b} \right) = \bar{\bar{D}}' \cdot \bar{\bar{M}}_1 \vec{c}}$$

$$\Rightarrow \quad \bar{\bar{M}}_2 \vec{a} = \vec{c} - \bar{\bar{M}}_2 \vec{b}$$

$$\bar{\bar{D}} \vec{a} = \bar{\bar{D}}' \bar{\bar{M}}_1 \cdot \vec{c} + \bar{\bar{D}} + \vec{b}$$

$$\begin{bmatrix} -\bar{\bar{M}}_2 & I \\ \bar{\bar{D}}_1 & \bar{\bar{D}}_2 \bar{\bar{M}}_1 \end{bmatrix} \begin{bmatrix} \vec{b} \\ \vec{c} \end{bmatrix} = \begin{bmatrix} \vec{M}_2 \cdot \vec{a} \\ \bar{\bar{D}} \cdot \vec{a} \end{bmatrix}$$

Physical Interpretation of b, c, and Their Role in S-Parameter Extraction

In the mode-matching method applied to waveguide discontinuities, the excitation is defined through a vector a⃗\vec{a}a that specifies the amplitudes of incident modes at the input port—typically, a unit excitation in the fundamental TE10_{10}10 mode.

When this incident wave interacts with a discontinuity (such as a dielectric step), part of the wave is reflected back into the same port, and part is transmitted into the other port. The amplitudes of these reflected and transmitted modes are represented by two vectors:

- b⃗: the amplitudes of reflected modes in the input waveguide (port 1),
- c⃗: the amplitudes of transmitted modes in the output waveguide (port 2).

These vectors describe how the incident energy redistributes into different modes as it interacts with the discontinuity. They are not arbitrary quantities—they directly express how the structure scatters the incoming fields, and thus represent the output of the scattering matrix S acting on the input a⃗.

Formally, in a two-port network, the scattering matrix relates incoming to outgoing wave amplitudes via:

$$\begin{bmatrix} \vec{b} \\ \vec{d} \end{bmatrix} = \mathbf{S} \begin{bmatrix} \vec{a} \\ \vec{c}_{\text{in}} \end{bmatrix}$$

Therefore, solving the mode-matching equations for a given input a yields the column of the S-matrix corresponding to that excitation. Specifically:

- b contains reflected S-parameters (e.g., S11, S12, ...),
- c contains transmitted S-parameters (e.g., S21, S22, ...).

How S11 and S21 Are Extracted

To compute specific S-parameters, we set:

$$a = [1, 0, 0, \ldots, 0]^T$$

This represents unit excitation of mode 1 (TE10) at port 1.

We then solve the system:

$$\begin{bmatrix} -\bar{M}_2 & I \\ \bar{B} & -\bar{B}_2\bar{M}_1 \end{bmatrix} \begin{bmatrix} \vec{b} \\ \vec{c} \end{bmatrix} = \begin{bmatrix} \bar{M}_2\vec{a} \\ \bar{B}\vec{a} \end{bmatrix}$$

The solution gives:

- b1 = S11 → reflection coefficient for the fundamental mode,
- c1 = S21 → transmission coefficient into the fundamental mode at port 2.

Thus, the vectors b and c are not just intermediate quantities—they are the actual result of applying the S-matrix to a. Solving this system with different excitation vectors a allows us to compute the entire S-matrix column by column.

MATLAB results:

Figure 1: |S11| and |S21| vs. Frequency

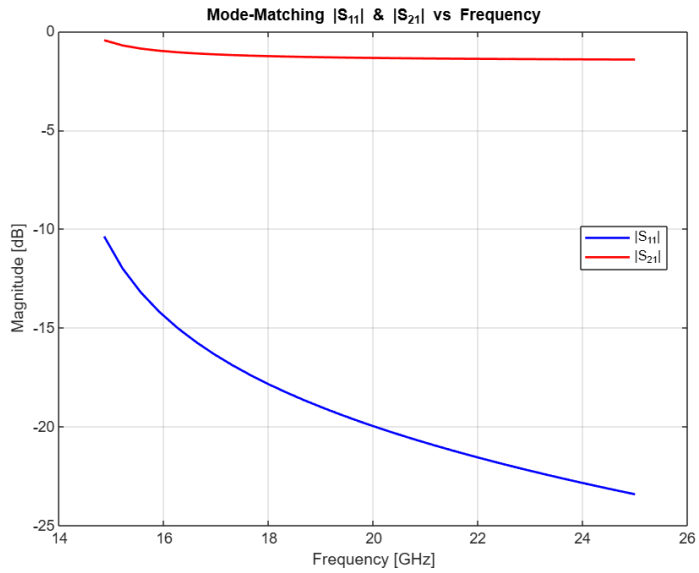

This plot displays the frequency response of the reflection (S11) and transmission (S21) coefficients computed using the Mode Matching method, over the range 14.85 GHz to 25 GHz.

- **S11** represents the reflection coefficient – the fraction of the input wave reflected back toward port 1.
- **S21** represents the transmission coefficient – the fraction of the input wave transmitted through to port 2.

Observations:

- At lower frequencies (around 17.3 GHz), |S11| is approximately -9.5 dB, indicating about 11% of power is reflected.
- As the frequency increases, |S11| drops significantly, reaching values below -22 dB at 25 GHz (less than 1% reflection).
- |S21| remains close to 0 dB throughout, indicating nearly complete transmission.

Physical Interpretation:

As discussed in Pozar (Microwave Engineering, Ch. 4.3–4.4), impedance mismatch due to the abrupt change in waveguide dimensions and permittivity causes reflection at lower frequencies. As frequency increases, higher-order modes propagate more efficiently, and the mode field better conforms to the geometry, resulting in improved matching and reduced reflection.

Figure 2: Power Conservation – |S11|^2 + |S21|^2

This plot verifies energy conservation in the simulated system by checking whether the sum of reflected and transmitted power equals the incident power:

|S11|^2 + |S21|^2 = 1 (ideal, lossless case)

Observations:

- The solid black line shows the calculated total power; the dashed red line marks the ideal value of 1.

- At lower frequencies (15–15.3 GHz), the computed sum drops to around 0.91–0.97, indicating a loss of 3–9% of input power.

Explanation:
This loss is **not physical**, but numerical. It is due to **modal truncation**: only N = 100 modes are used in the expansion. Higher-order propagating and evanescent modes that carry part of the energy are not included in the solution.

As described by Pozar (Section 6.7), increasing the number of modes improves accuracy and power conservation. For full compliance with energy conservation, a sufficiently large number of modes and possibly evanescent mode inclusion is necessary.

CST Results – Simulation Overview and S-Parameters

Geometry and Setup

The structure simulated in CST consists of a rectangular waveguide with a dielectric step discontinuity. The simulation uses the following parameters:

The waveguide consists of two segments with different heights and permittivities, aligned vertically. The excitation is applied through port 1 on the left, and the wave propagates toward port 2 on the right. Both ports support the TE10 mode

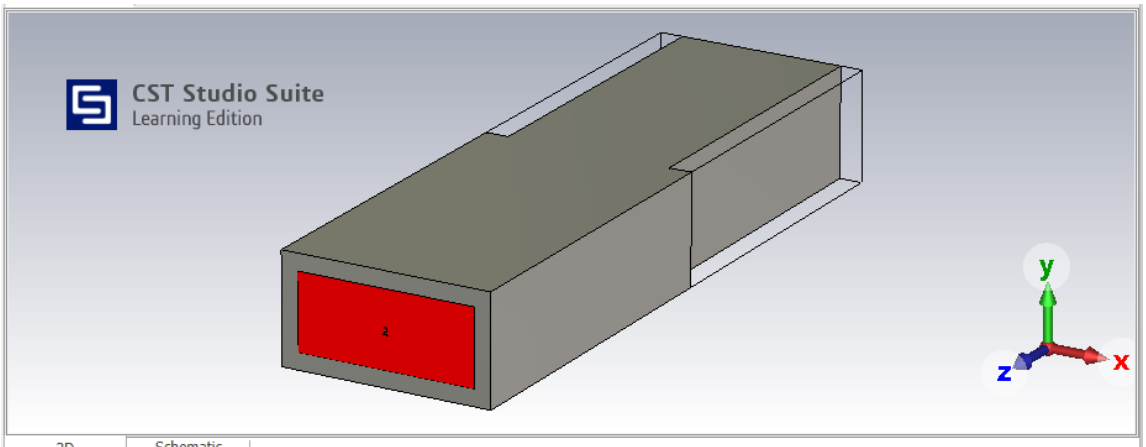

Parameter List

Name	Expression	Value	Description
eps_r1	= 2	2	
h	= 4.5	4.5	
L	= 20	20	
c	= 7.9	7.9	
epsilon_r2	= 1	1	
a	= 10.6	10.6	
f_start	= 0	0	
f_stop	= 30	30	
<new parameter>			

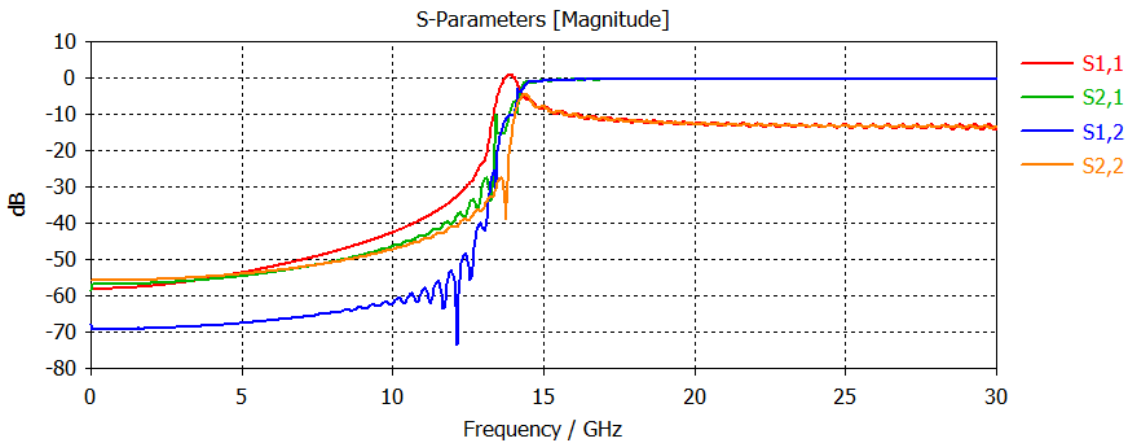

S-Parameters Analysis

The bottom plot shows the magnitude (in dB) of the S-parameters obtained from the CST simulation:

- **S1,1** (red): Reflection at port 1
- **S2,1** (green): Transmission from port 1 to port 2
- **S1,2** (blue): Transmission from port 2 to port 1 (reciprocal of S2,1)
- **S2,2** (orange): Reflection at port 2

Key Observations:

1. **Below 14.5 GHz:** All S-parameters are low (near -60 to -80 dB). This is because the operating frequency is below the cutoff frequency of the waveguide modes – no significant propagation occurs.
2. **At 14.7–15.5 GHz:** A sharp rise occurs in S2,1 and S1,1. This indicates that the TE10 mode starts propagating. The rise of S2,1 reflects increasing power transfer to the output, while S1,1 shows reflection due to the step.
3. **From 17 GHz onward:**
    - **S1,1** stabilizes around -9 dB to -12 dB, indicating moderate reflection – similar to the Mode Matching prediction.
    - **S2,1** stabilizes around -1 dB to 0 dB, meaning most of the energy is transmitted through.
    - **S1,2** overlaps S2,1 (as expected from reciprocity in passive structures).
    - **S2,2** remains low and stable, since port 2 is matched and not the source of excitation.

When a wave propagates through a rectangular waveguide with a discontinuity — such as a step change in height or dielectric constant — an impedance mismatch occurs between the two sections. This mismatch causes part of the incident wave to reflect back and the rest to transmit forward. The degree of reflection depends on the difference in modal impedances, which are functions of frequency, waveguide dimensions, and material properties. Near the cutoff frequency, the impedance changes are more abrupt relative to the wavelength, resulting in stronger reflections and reduced transmission. As frequency increases, the wave fields better conform to the waveguide geometry, leading to improved matching and reduced reflection.

In the CST results, this behavior is clearly observed: below 14.5 GHz, very little power propagates; between 14.5 and 17 GHz, both reflection (S11) and transmission (S21) rapidly increase as the TE10 mode becomes propagating. Above 17 GHz, S11 gradually decreases to about −10 dB, while S21 stabilizes near 0 dB, indicating efficient transmission. These trends match well with theoretical predictions from the Mode Matching method. CST additionally captures higher-order effects such as evanescent modes and fringing fields, providing a more complete picture of the wave behavior near the discontinuity.

Electric Field Visualization (CST) – E-field Snapshots

The following electric field snapshots, taken from CST Studio Suite, illustrate how the TE10 mode propagates through the waveguide structure at different frequencies. The color map represents the instantaneous magnitude of the electric field (in dB V/m), while the vectors show the field direction.

Each row shows two views for the same frequency:

Left column: excitation from port 1 (forward direction)

Right column: excitation from port 2 (reverse direction)

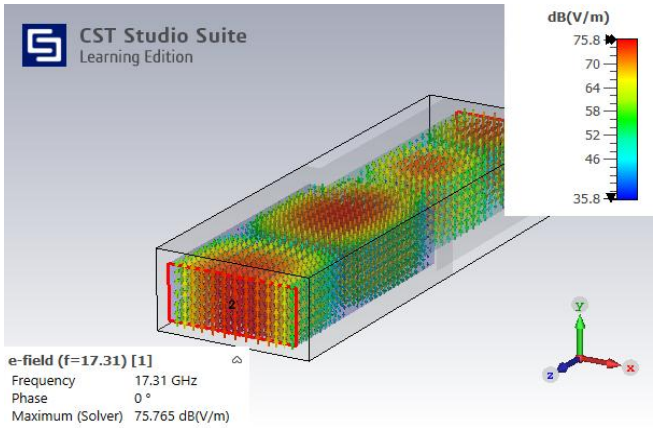

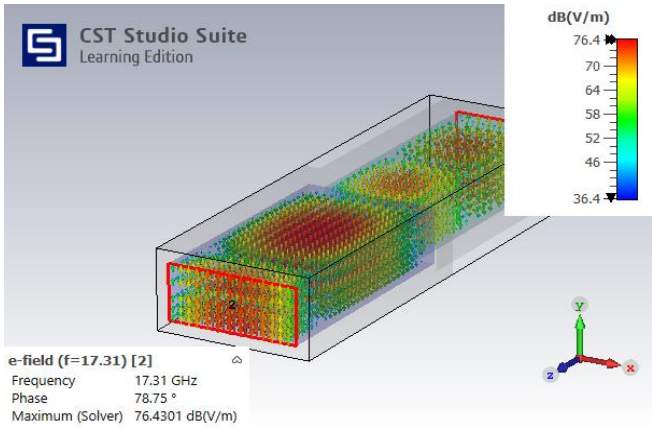

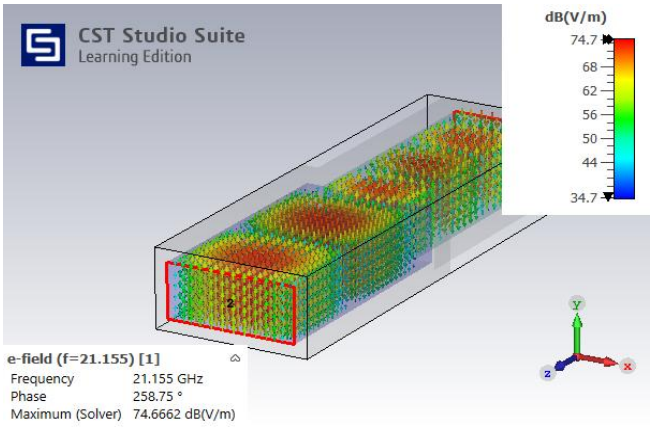

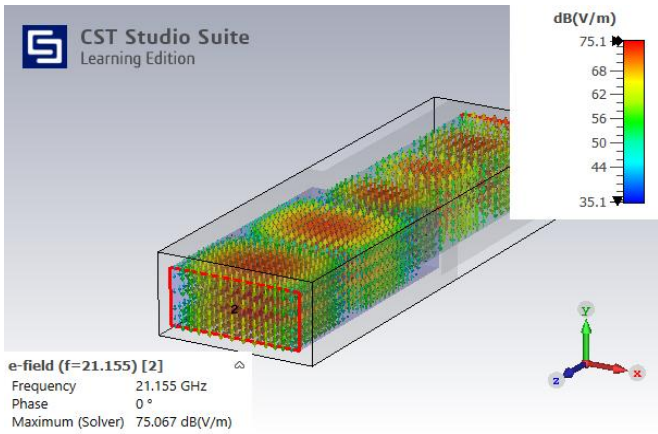

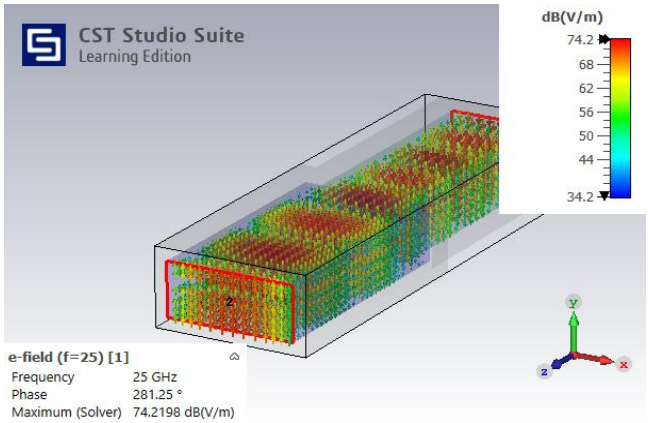

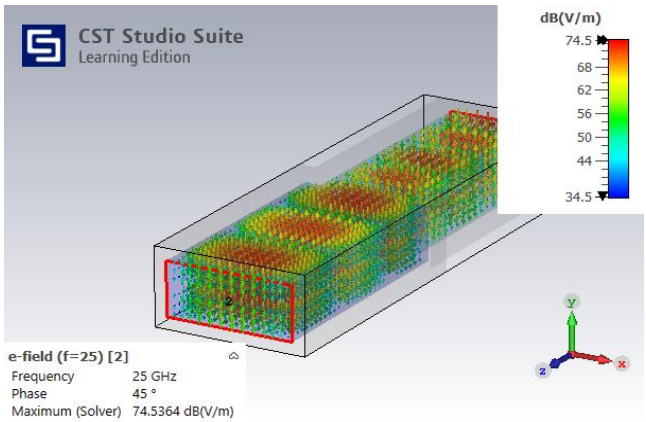

1 .Frequency = 17.31 GHz

At this frequency, the wave has just entered the propagating regime. In both directions, partial reflections and standing wave patterns are clearly visible. Energy is transmitted but with noticeable field distortion near the dielectric step.

2 .Frequency = 21.155 GHz

Here, the field distribution is smoother and more uniform, with minimal distortion. The wave transitions cleanly between the two waveguide sections, indicating improved impedance matching. Reflections are reduced, and transmission is dominant.

3 .Frequency = 25 GHz

At high frequency, the fields are tightly confined, and energy propagates efficiently through the step. The E-field vectors show near-planar wavefronts, and the standing wave effects seen at lower frequencies are no longer visible. This confirms high transmission and low reflection — consistent with the |S21| and |S11| results.

Comparison Between Mode Matching and CST

This project employed both Mode Matching and CST simulations to analyze a dielectric step in a rectangular waveguide. While both methods yielded similar trends for S_{11} and S_{21}, they differ significantly in scope and implementation.

Mode Matching is a semi-analytical technique based on expanding the fields in terms of TE modes and enforcing boundary conditions at the discontinuity. It is efficient, intuitive, and provides good physical insight, but it relies on truncating the number of modes, which can cause small errors—especially near cutoff or when evanescent modes are significant.

CST, on the other hand, performs a full-wave numerical simulation of Maxwell's equations in 3D. It includes all field components, boundary effects, and mesh-induced variations, offering a more complete and realistic solution. However, it is computationally heavier and less transparent in terms of modal interpretation.

Overall, Mode Matching offers fast and insightful theoretical analysis, while CST provides full-field validation. Together, they give a reliable and complementary view of the waveguide behavior.